Instructions for use

HOME DELUXE
WIR MACHEN ZUHAUSE

Outdoor beanbag HEAVEN

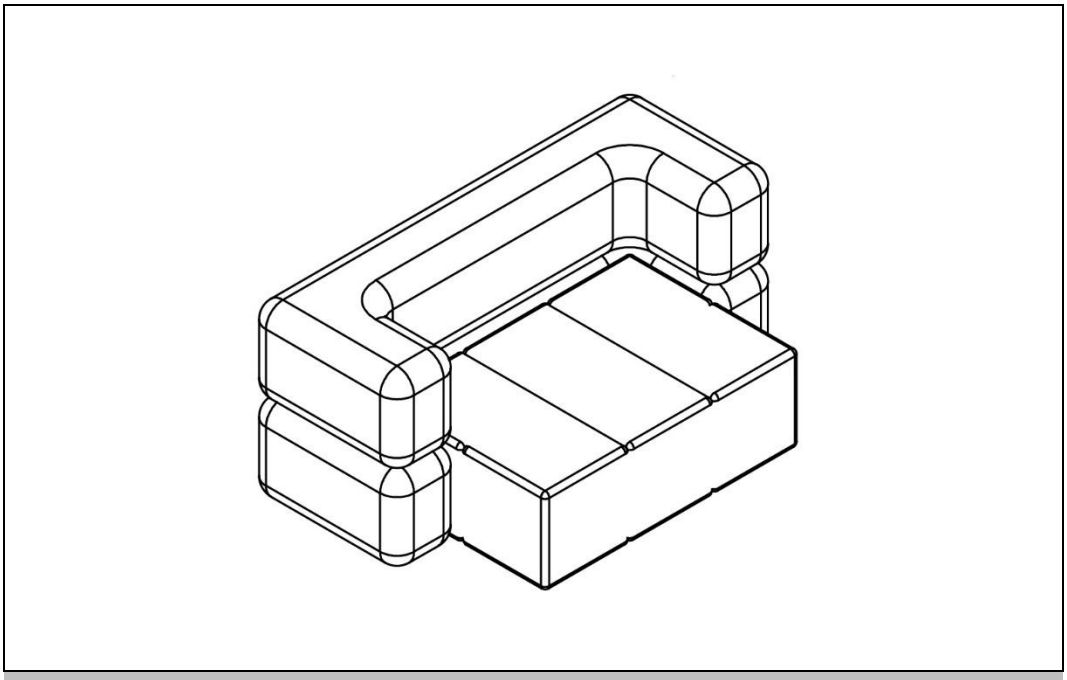

Original instructions for use

Designed in Germany

IMPORTANT:
KEEP FOR FUTURE REFERENCE.
READ CAREFULLY!

Table of contents

1. General information 3
1.1. Product overview 3
1.2. General notes 3
1.3. Guarantee 3
2. Information on the instructions for use 3
2.1. Availability of the instructions for use 3
2.2. Target groups of the instructions for use 4
2.3. Information on the translation 4
2.4. Explanation of symbols 4
2.5. General information on the instructions for use 5
2.6. Intended use 5
2.7. General safety instructions 5
3. Product features 6
3.1. Technical data 6
3.2. Product description 7
4. Scope of delivery 7
5. Assembly 8
5.1. Safety instructions 8
5.2. Structure of the product 8
6. Application 10
6.1. Safety instructions 10
6.2. Initial commissioning 11
6.3. Operation 11
6.4. Storage location 11
7. Troubleshooting 11
8. Cleaning and care 12
8.1. Safety instructions 12

9. Dismantling 13
9.1. Safety instructions 13
10. Waste disposal 13
10.1. General information 13

Dear customer,

Thank you for choosing a product from **Home Deluxe GmbH**. We hope you enjoy your new HEAVEN outdoor beanbag.

The instructions for use support you in the installation, commissioning, operation and maintenance of the product. The instructions for use and the safety instructions must be read carefully and in full. Observe these instructions to avoid hazards.

1. General information

1.1. Product overview

Outdoor beanbag HEAVEN| *Item ID:* 25031| *Variant ID:* 60384

1.2. General notes

In order to fulfil our claim, we are constantly improving quality, simplifying installation and operation and adapting the products to customer requirements. Due to these changes, the current version of the instructions for use can be found on our homepage.

The term "product" is used in the instructions for use for the "Outdoor beanbag HEAVEN.

1.3. Guarantee

The statutory liability for defects and warranty rights apply from the date of purchase.
Home Deluxe GmbH accepts no liability for damage caused by non-compliance with the instructions for use. Complaints arising from improper installation or use are excluded from the warranty. In the event of defects in the product, please contact our customer service in writing, stating product name, serial number and a photo of the rating plate:

Home Deluxe GmbH
Schanzeweg 2
32312 Lübbecke
Germany
Tel: +49 (0)5743 6181-0
www.home-deluxe-gmbh.de

If you have any further questions, please contact our customer service team using the contact form.

2. Information on the instructions for use

2.1. Availability of the instructions for use

The instructions for use are part of the product and should be kept complete and in the immediate vicinity of the product.

2.2. Target groups of the instructions for use

The instructions for use must be read and observed by every person involved in one of the following activities or uses:

- Unpacking
- Assembly / Installation
- Commissioning / Operation
- Maintenance / inspection / care
- Troubleshooting / repair
- Waste disposal

2.3. Information on the translation

The original instructions for use were written in German. Any other language available is a translation of the German version.

2.4. Explanation of symbols

Symbol	Explanation of symbols
	**WARNING** The symbol indicates possible dangers that could result in fatal or serious injuries. Before carrying out the corresponding installation or application step, read the corresponding note.
	**INFO / NOTE** The symbol provides important information and indicates material damage. Observe these before carrying out the corresponding installation or application step in order to understand problems and avoid damage.
	**Read instructions for use** The symbol indicates that the operating instructions must be read carefully before mounting/installing and/or operating the appliance.

2.5. General information on the instructions for use

The instructions for use refer to the HEAVEN outdoor beanbag and contain important information on assembly, operation, maintenance and cleaning. The instructions for use, in particular the safety instructions, must be read carefully before using the product; keep the instructions for use in a safe place. Only use the product as described in these instructions for use to prevent accidental injury or damage. If you pass the product on to third parties, these instructions for use must also be handed over.

2.6. Intended use

The product is of high quality, durable and intended or suitable exclusively for private use to a reasonable and customary extent. Furthermore, our product is **not** intended for commercial use. Commercial use is only permitted with the written authorisation of Home Deluxe GmbH.

The product is intended as a beanbag for outdoor use.

Only use the product as described in these instructions for use. Any other use is considered improper and may result in damage to property or personal injury. The manufacturer accepts no liability for damage caused by improper or incorrect use.

2.7. General safety instructions

General hazard warnings



- Improper handling can lead to considerable personal injury and damage to property.
- **Only** install the product if the scope of delivery is complete and in perfect condition.
- Ensure that all parts are undamaged and correctly installed. There is a risk of injury if they are not installed correctly. Damaged parts can affect safety and function.
- Only place the product on a safe, level and firm surface.
- Do not make any changes to the product.
- Check the upholstery at regular intervals

Danger for children



- Keep children away from packaging materials. There is a risk of suffocation!
- Keep children away from the assembly site while the product is being assembled. The scope of delivery contains small parts that can be swallowed or cause serious injury.
- **Risk of tipping over!** The product is not a children's toy, climbing wall or sports equipment. The individual elements of the product can topple over when loaded on one side, which can result in death.
- Children can injure themselves when playing with the product or when pulling up on the product.
- Explain to the children how to use the product correctly and never leave them unsupervised while playing.
- Make sure that small children do not put small parts in their mouths.

Risk of injury
Improper handling of the product can lead to injuries



- Do not make any design changes to the product. Any modifications must be authorised in writing by the manufacturer and carried out in accordance with the instructions.
- If the product is damaged, it must no longer be used. Damaged parts must be repaired or replaced with original spare parts.
- Ensure that the product is permanently installed securely to avoid injury.

Risk of damage



- Improper handling of the product can lead to damage.
- Do not open the packaging with sharp objects (e.g. knives, scissors or similar) as this may damage the product. Be careful when opening.
- Do not use the product near sources of heat or naked flames.
- Protect the product from direct light and sunlight.
- To avoid discolouration of the fabric, the product should be placed at least 40 cm away from radiators and any heat sources.
- Do not place the product directly against a wall; keep a distance of at least 30 cm from walls.

Explosion hazard



- **Caution**: Do not store highly flammable, combustible or explosive substances inside the product. Highly flammable substances can catch fire.

3. Product features

3.1. Technical data

Outdoor beanbag HEAVEN	
Dimensions (L x W x H)	76 x 152 x 100 cm
Seat (W x D)	80 x 58 cm
Lying surface (W x D)	152 x 136 cm
Colour	Anthracite
Seat height	38 cm
Weight	12 kg

3.2. Product description

The HEAVEN beanbag offers a unique conversion function, effortlessly transforming it from a cosy sofa into a comfortable bed. This flexible utilisation option makes it the perfect companion for anyone looking for maximum comfort and versatility. So you always have the right position, whether you want to read, sunbathe or simply stretch out. Thanks to the memory styrofoam ball filling, the beanbag moulds perfectly to your body shape and offers you ergonomic support for relaxing hours outdoors. The special filling ensures that the beanbag always returns to its original shape and thus retains its comfort in the long term. Our HEAVEN garden sofa is also made for outdoor use: UV-resistant and equipped with extra strong, tear-resistant seams, it withstands wind and weather with ease. The water-resistant fabric ensures that your beanbag stays dry even in rain and moisture. The removable and washable cover makes it easy to care for so that the beanbag always stays in top condition. With these deluxe features, from the conversion function to the durability, the HEAVEN beanbag clearly stands out from the competition and will quickly become your new favourite spot.

4. Scope of delivery

Check the packaging for external damage on delivery. Furthermore, immediately after unpacking, check that the scope of delivery is complete and that the product and all components are in perfect condition. Only assemble the product if the scope of delivery is complete and undamaged. As this is a modular product, the individual scope of delivery of the individual modules is listed below.

No.	Description of the	Quantity	Picture
1.	Beanbag	1	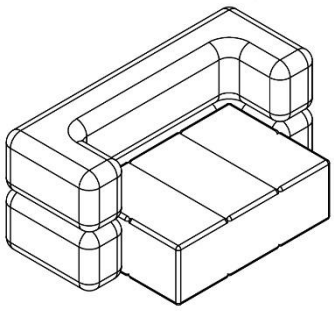
2.	Styrofoam ball	1	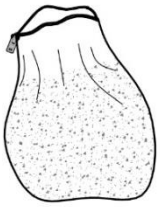

5. Assembly

5.1. Safety instructions

All health and safety information must be read.

Risk of injury
Improper handling during installation can lead to injuries

- The number of parcels may vary depending on the order. Please ensure that the parcels are opened at the top. Be very careful when opening the parcels.
- Immediately after unpacking, check that the scope of delivery is complete and that the product and all parts are in perfect condition.
- **Only** install the product if the scope of delivery is complete and in perfect condition.
- Only place the product on a safe, level and firm surface.
- Operating errors, assembly errors or damage caused by assembly are excluded from the warranty.
- One person is required to assemble the product.
- Wear protective clothing such as safety shoes and protective gloves during assembly.

5.2. Structure of the product

The product is delivered disassembled and can be assembled with little effort. Follow the assembly instructions carefully. If the instructions are not followed, the function and safety of the product cannot be guaranteed.

Tools required

	Cutter knife	

NOTE

- The following instructions must be read carefully.
- Mount the product in the position where it will be installed.
- The polystyrene balls are located in the beanbag.
- Keep the bag and put the polystyrene balls in the bag so that the beanbag can be washed.

assembly steps

Illustration	Build-up step
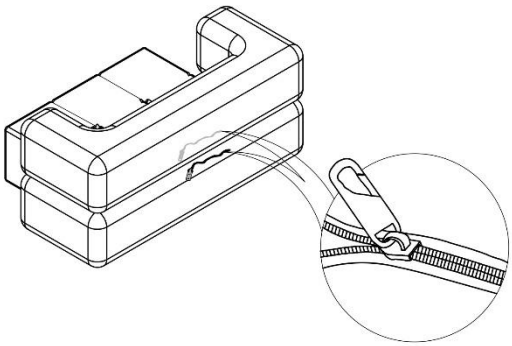	**Step 1:** - Open the zip of the beanbag.
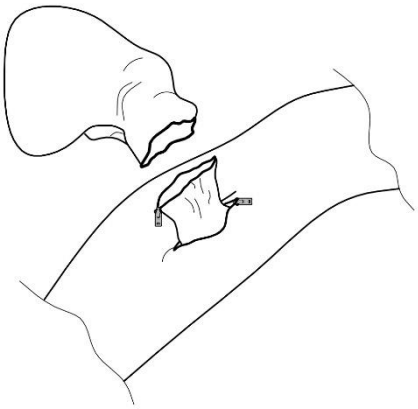	**Step 2:** - Tip the polystyrene balls into the beanbag.
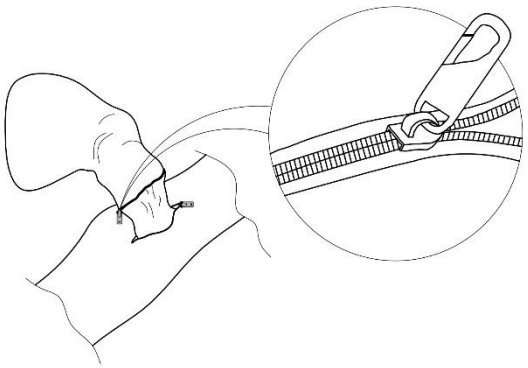	**Step 3:** - Close the zip of the beanbag.

Illustration	Build-up step
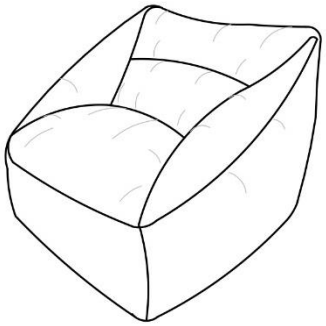	**Step 4** - Finished product.
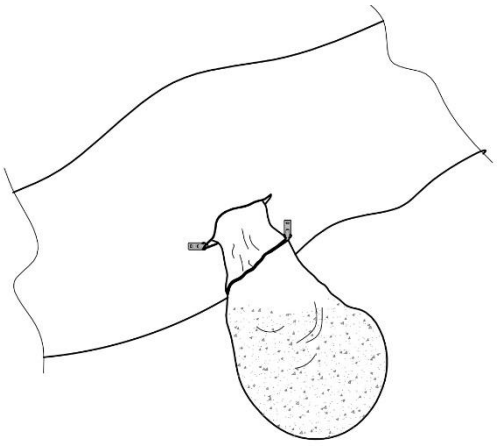	**Step 4:** - Remove the polystyrene balls before you wash the beanbag.

6. Application

6.1. Safety instructions

The following health and safety information must be read carefully.

Risk of injury
Improper handling during operation can lead to injuries



- Do not use a damaged product.
- Do not make any changes to the product.
- **Risk of tipping and falling!** The product is not a children's toy, climbing wall or sports equipment. The individual elements of the product can topple over when loaded on one side, which can result in death.
- Children can injure themselves when playing with the product or when pulling up on the product.
- **Risk of tipping and falling!** Do not stand on the beanbag.
- Check the product before each use to ensure that the zip is closed.

6.2. Initial commissioning

Check the product for damage before using it for the first time. The product may only be used if it is undamaged.

6.3. Operation

Check before using the product,

- the proper condition.
- that the zips are closed.

6.4. Storage location



- Only store the product in dry, weather-protected and well-ventilated rooms.

7. Troubleshooting

If the following faults occur during operation, please check the following fault causes using the following table. If the fault cannot be rectified by the measures listed, take the product out of operation.

Error	Possible cause	Solution
The product wobbles or vibrates	- The product is overloaded - The polystyrene balls fall out of the beanbag / stool	- Comply with load limits - Close the zip.

If another problem occurs with the product, please contact us.

8. Cleaning and care

8.1. Safety instructions

Risk of injury
Improper handling during operation can lead to damage



- Remove all dirt as quickly as possible. (the longer you wait, the harder it is to remove the dirt).
- The cover can be damaged by exposure to high heat and UV light.
- The seat cushions of upholstered furniture can change as a result of constant strain; this is a normal process and is not a reason for complaint.
- The cushions also change shape with constant use, but this is also no reason for complaint.
- The colour of the upholstery may change due to colour abrasion from fabrics, e.g. denim, but this is not a reason for complaint.
- Troughing and creasing may occur during operation of the product.
- To remove unwanted dirt or hair, simply vacuum the product.
- Damage to the material can be avoided by using a flat nozzle or soft brush on the hoover.
- Regular care can prevent persistent odours.
- Clean and care for the product regularly, regardless of visible stains.
- Do not clean the fabric with a steam cleaner.
- Use a cleaning agent suitable for upholstered furniture to care for the fabric.



Note on pill formation:
Pilling occurs when the fibres of the upholstery pull together and form a knot. It is therefore also known as pilling and is one of the natural signs of wear and tear. It is therefore not an indication of inferior quality, but the result of everyday wear and tear. The durability of the upholstery fabric is not affected by this, as the pills are only formed from loose fibres.

What is the best way to remove pill formation?

- Lint roller
- Lint brush
- Pilling shaver



Note on casual upholstery:
Casual upholstery is ideal for making yourself particularly cosy and comfortable. The upholstery adapts to your body shape. By sinking into your sofa, the load is greater in comparison to classic upholstery fabric and waves/wrinkles form. This is a typical characteristic of the product and not a defect.

Pilling and creasing are not quality defects and are excluded from complaints.

9. Dismantling

9.1. Safety instructions

Risk of injury
Improper handling during disassembly can lead to injuries



- Disassembly of the product must be carried out in reverse order to assembly. (**see chapter Assembly**)

10. Waste disposal

10.1. General information



- Dispose of the product and all components in accordance with local and country-specific regulations to prevent damage to the environment.
- Our packaging is made from environmentally friendly materials. They can be recycled and thus serve as valuable raw materials. Dispose of the packaging material (cardboard, dirty packaging, etc.) separately and professionally in accordance with the applicable national regulations.
- Contact the manufacturer if you are unsure about disposal.
- You can also obtain information on proper disposal from the local waste disposal centres

Home Deluxe GmbH
Schanzeweg 2
32312 Lübbecke
Germany
Tel: +49 (0)5743 6181-0
www.home-deluxe-gmbh.de

GA-272-00_heaven
2024/09